Surf Wall

SURF WALL

Total graphic area: 102”w X 281.6”h
Total visual area: 92”w X 271.6”h
(2) Prints create one structure
File @ 25% of actual size

GRAPHIC CODES

Surf Wall - Single sided
Total graphic area: 102”w X 281.6”h
Total visual area: 92”w X 271.6”h
This template represents only one side of the structure. Please design each side on an individual template and not as a whole. If artwork is the same on both sides one layout is suitable for printing.

Surf Wall - Double sided
Outside dimension for Surf Wall
Total graphic area: 102”w X 281.6”h
Total visual area: 92”w X 271.6”h
Inside dimension for Surf Wall
Total graphic area: 102”w X 273”h
Total visual area: 92”w X 263”h
This template represents only one side of the structure. Please design each side on an individual template and not as a whole. If artwork is the same on both sides one layout is suitable for printing. Do not design any critical elements on monitor placment.

Please be sure to include the 5” bleed around the perimeter to compensate for the finishing of the graphics. Do not design any critical elements (text, logos, etc.) within 1” of the edge (see dotted lines).

General Artwork Guidelines
- cmyk color mode
- do not embed images, supply them
- resolution must be 100-120 ppi
- all fonts must be created to outlines

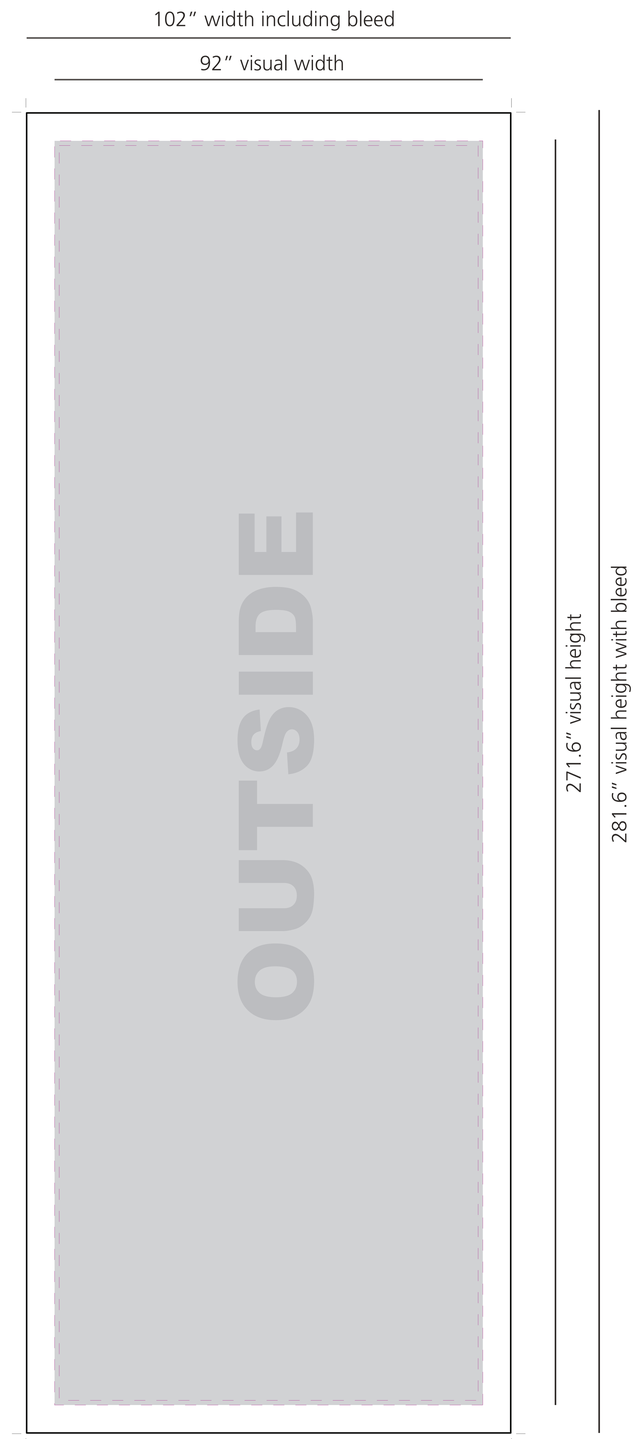

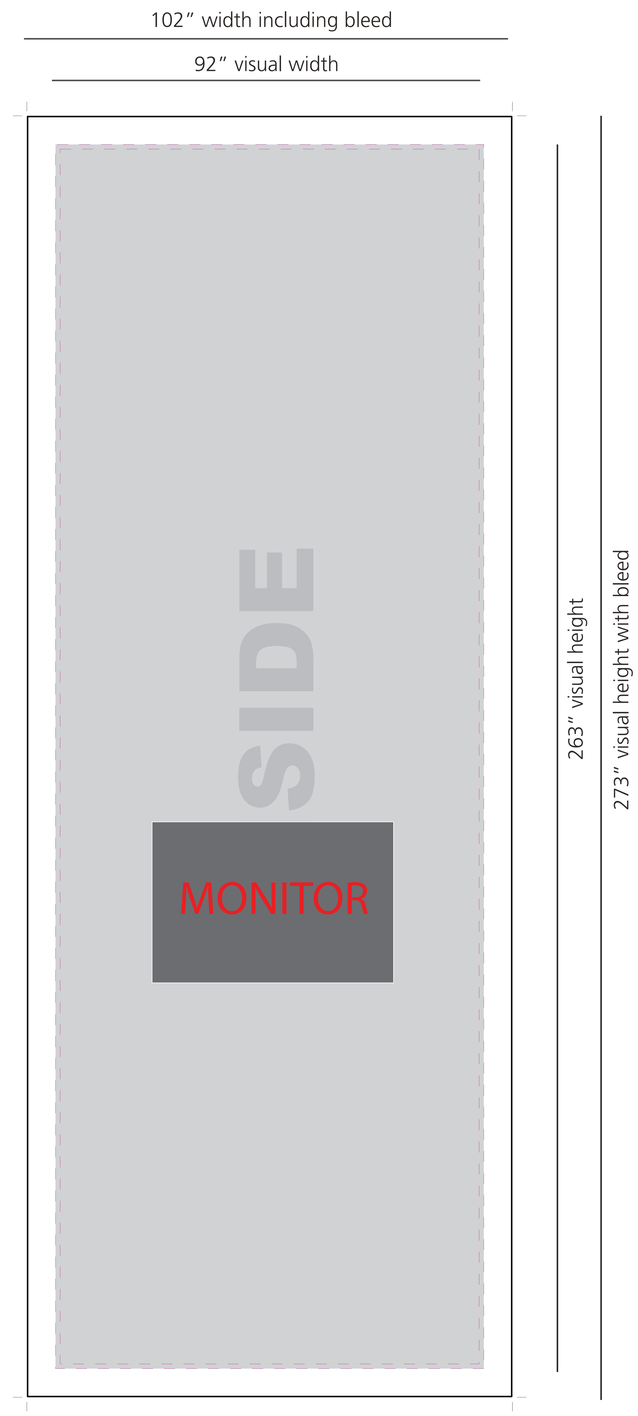

Design Here if ordering SURF WALL-G

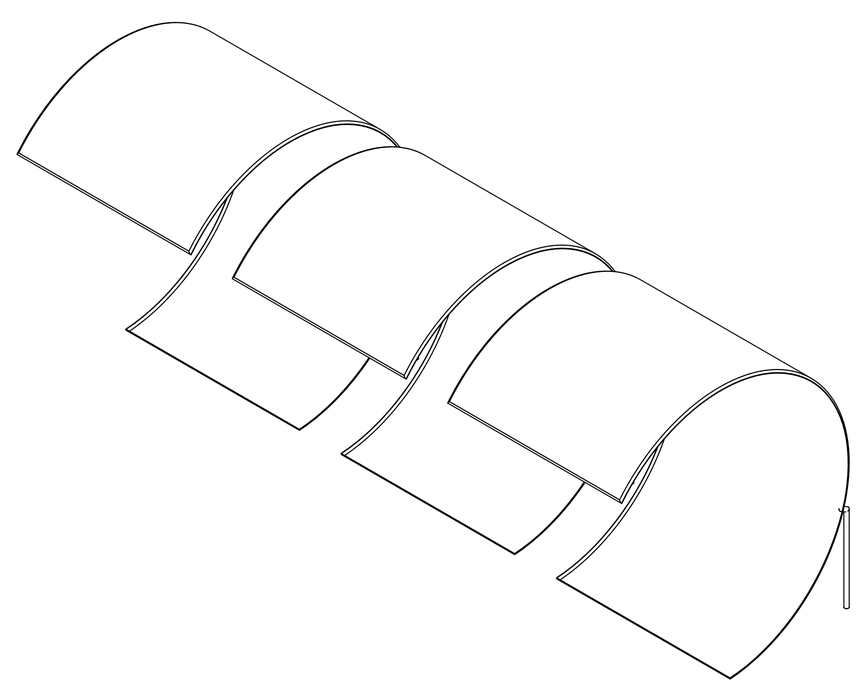

OUTSIDE

SIDE

MONITOR